GLORY

Revolution Retail Systems

QUANTUM™ SERIES

Quantum 4S/6S - 4S/6S AV - 4S/6S MV

QUANTUM™ SERIES

Quantum 4S/6S

Quantum 4S/6S AV

Quantum 4S/6S MV

HARDWARE FEATURES:

- 10” Touch screen color display
- Closed loop architecture of notes
- Recycle and lockable deposit cassettes
- “Fitness sort” on recycled notes
- Flexible note orientation (not required to separate or face notes)
- Scalable platform
- Continuous 24/7 monitoring
- UPS included
- Optional integrated biometrics
- Integrated printer
- Optional integrated barcode scanner
- Integrated drop chute
- Vault - UL 291 business hours rated

FEATURE CAPABILITY:

- Ability to integrate with POS system
- Same day credit on deposit (provisional credit)

SOFTWARE FEATURES:

- PCI compliant
- REACH™ remote monitoring solutions for tech support
- Real time cash level monitoring
- Scalable – cluster format
- Reporting – standard or custom
- Lane and/or clerk accountability
- Tills automatically traced to a specific user
- Multiple tills per register/lane
- Configurable user permission levels for machine access
- Multiple user authentication schemes (log-in and pin, or biometrics)
- Automatic prompting of periodic password changes
- Guided deposit preparation: automatically calculates and moves deposit to courier cassette
- Automatic end of day reporting
- Courier specific log-in menu
- Video troubleshooting tips
- Video guidance for system operation

ELECTRICAL RATINGS:

- 100-130 V
- 50/60 Hz
- 6A

GLORY | Revolution Retail Systems

Revolution Retail Systems LLC | 1400 Valwood Parkway, Suite 100 | Carrollton, TX 75006 | Tel: 469.317.2910 | 855.616.3827 | Fax: 469.364.3856
© January 2023 Revolution Retail Systems LLC | www.rrs360.com | Email: revolutionsales@rrs360.com

SPECIFICATIONS

Physical Characteristics (nominal):	Quantum 4S	Quantum 4S AV	Quantum 4S MV	Quantum 6S	Quantum 6S AV	Quantum 6S MV
Height	30.8" (781 mm)	30.8" (781 mm)	30.8" (781 mm)	30.8" (781 mm)	30.8" (781 mm)	30.8" (781 mm)
Width	32.0" (813 mm)	44.0" (1,118 mm)	44.0" (1,118 mm)	32.0" (813 mm)	44.0" (1,118 mm)	44.0" (1,118 mm)
Depth (install depth)	24.1"(611 mm)	24.1"(611 mm)	24.1"(611 mm)	24.1"(611 mm)	24.1"(611 mm)	24.1"(611 mm)
Weight (empty)	575 lbs (261 kg)	875 lbs (397 kg)	875 lbs (397 kg)	575 lbs (261 kg)	875 lbs (397 kg)	875 lbs (397 kg)
Device Configuration:						
Standard Recycling Cassettes	4	4	4	6	6	6
Dispense/Refill Cassettes	2	2	2	1	1	1
Deposit Cassette 1	1	1	1	1	1	1
Deposit Cassette 2	0	0	1	0	0	1
Notes:						
Capacity per Cassette (max)*:						
Standard Recycle Cassette	60 notes	60 notes	60 notes	60 notes	60 notes	60 notes
Dispense/Refill Cassette	300 notes	300 notes	300 notes	300 notes	300 notes	300 notes
Deposit Cassette 1	1,500 notes	1,500 notes	1,500 notes	1,500 notes	1,500 notes	1,500 notes
Deposit Cassette 2	-	-	2,200 notes	-	-	2,200 notes
Total Capacity of Notes	2,340 notes	2,340 notes	4,540 notes	2,160 notes	2,160 notes	4,360 notes
Processing Speed In or Out (max)	3 notes/sec	3 notes/sec	3 notes/sec	3 notes/sec	3 notes/sec	3 notes/sec
Recycling Capability (max)	(4) denominations	(4) denominations	(4) denominations	(6) denominations	(6) denominations	(6) denominations
Coin:						
Recycle Modules	4	4	4	4	4	4
Capacity by Denomination (max):						
• Nickels	1,850	1,850	1,850	1,850	1,850	1,850
• Dimes	4,000	4,000	4,000	4,000	4,000	4,000
• Quarters	1,700	1,700	1,700	1,700	1,700	1,700
• Loonies	1,100	1,100	1,100	1,100	1,100	1,100
• Toonies	900	900	900	900	900	900
Total Coin Capacity (max)	9,550	9,550	9,550	9,550	9,550	9,550
Coin Processing Speed In (up to)	700 coin/min	700 coin/min	700 coin/min	700 coin/min	700 coin/min	700 coin/min
Coin processing Speed Out (up to)	16 coin/sec	16 coin/sec	16 coin/sec	16 coin/sec	16 coin/sec	16 coin/sec
Accepts Up To	(6) denominations	(6) denominations	(6) denominations	(6) denominations	(6) denominations	(6) denominations
Recycle Up To	(4) denominations	(4) denominations	(4) denominations	(4) denominations	(4) denominations	(4) denominations

Revolution Retail Systems LLC | 1400 Valwood Parkway, Suite 100 | Carrollton, TX 75006 | Tel: 469.317.2910 | 855.616.3827 | Fax: 469.364.3856
© January 2023 Revolution Retail Systems LLC | www.rrs360.com | Email: revolutionsales@rrs360.com

QUANTUM™ SERIES

Quantum 4S/6S

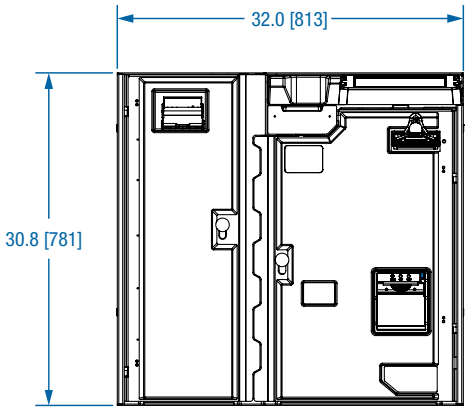

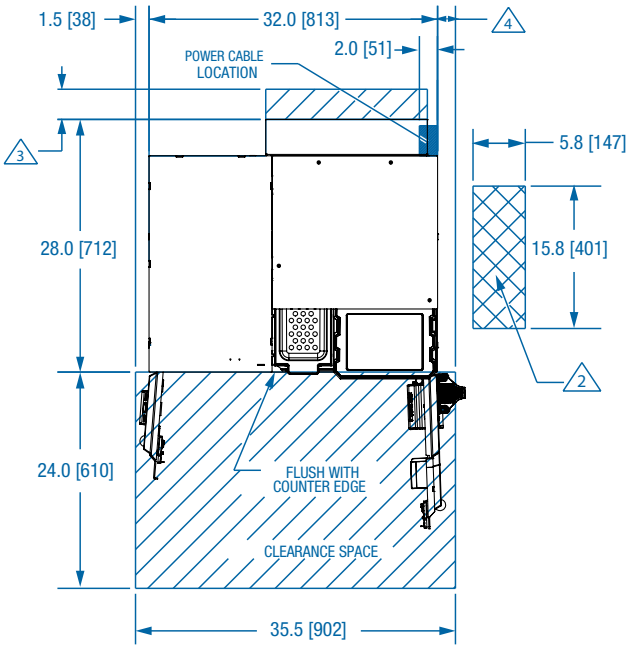

Quantum 4S/6S AV MV

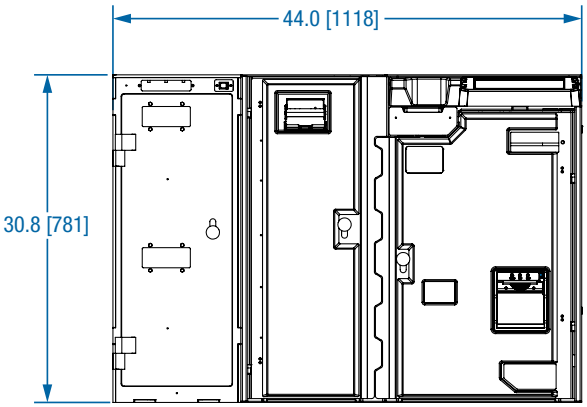

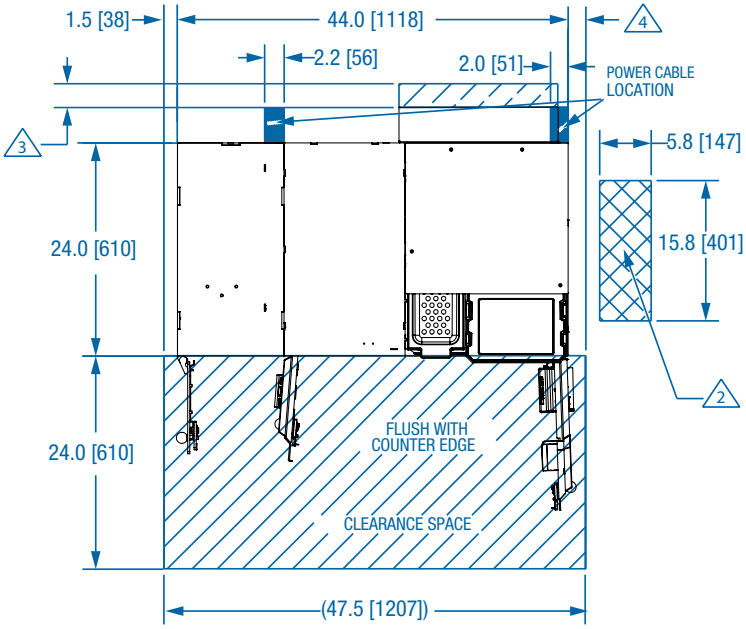

1 SYSTEM MUST BE SECURED TO LEVEL FLOOR.

2 UPS SHOULD BE PLACED/MOUNTED WITHIN 4 FEET OF THE QUANTUM UNIT. SEE UPS MANUFACTURER INFORMATION FOR SPACE REQUIREMENTS AND MOUNTING RESTRICTIONS.

3 IF THE A/C OUTLET OR DATA PORT IS NOT LOCATED IN THE INDICATED AREA BEHIND THE UNIT, THIS DIMENSION TO BE A MINIMUM OF 3" [76mm]. IF THE A/C OUTLET OR DATA PORT IS LOCATED IN THE INDICATED AREA BEHIND THE UNIT, THIS DIMENSION TO BE A MINIMUM OF 5" [127mm].

4 IF THE AUX VAULT IS INSTALLED ON THE RIGHT (BCR SIDE), A DISTANCE OF 2.5" [64mm] MINIMUN IS REQUIRED BETWEEN THE AUX VAULT AND MAIN UNIT.

GLORY | Revolution Retail Systems

Revolution Retail Systems LLC | 1400 Valwood Parkway, Suite 100 | Carrollton, TX 75006 | Tel: 469.317.2910 | 855.616.3827 | Fax: 469.364.3856
© January 2023 Revolution Retail Systems LLC | www.rrs360.com | Email: revolutionsales@rrs360.com